Technical Guide: PH3 Series - 460 V - 3 Phase

13.4 SEER2 R-454B Packaged Heat Pump with Optional Field-Installed Electric Heat

BHC Group Heating & Cooling, 5005 York Drive, Norman, OK 73069

6803989-UTG-A-0526

Supersedes: Nothing

2026-05-06

Contents

About the PH3 unit....5
Certification....5
Warranty summary....5
Features....5
Model number nomenclature....8
Model number nomenclature example....8
Unit components....9
Unit limitations....9
Application limitations....10
Accessories....10
Guide specifications....12
Description....12
Unit cabinet....12
Refrigerant components....13
Controls....14
Physical data....15
Cooling performance data....16
Heating performance data....17
Cooling sound performance data....19
Heating sound performance data....19
Unit dimensions and access locations....19
Weights and dimensions....20
Unit clearances....20
Electrical data for 460-3-60 single source power....21
Electrical data for 460-3-60 multi source power....21
Electric heat performance data for 460-3-60....22
Single-point wiring kit....22
Electric heat minimum supply air data....23
Indoor blower specifications....23
Airflow performance data for side duct application....23
Additional static resistance data....24
Bottom duct dimensions....25
Rear duct dimensions....25
Typical applications....26
Third-party trademarks....28

About the PH3 unit

These packaged cooling and heating heat pumps are designed for outdoor installation. Only utility and duct connections are required at the point of installation.

Due to continuous product improvement, specifications are subject to change without notice. **This document is only for distribution use - it is not to be used at point of retail sale.**

Visit us on the web at www.simplygettingthejobdone.com. Additional rating information can be found at www.ahridirectory.org.

Certification

Assembled at a facility with an ISO 9001:2015-certified Quality Management System

Warranty summary

Standard 1-year limited parts warranty. Standard 5-year limited compressor warranty. Refer to the limited warranty certificate in the *User's Information Manual* for details.

Features

- **Operating efficiency**: All PH3 heat pump models are rated at 13.4 SEER2 and 6.7 HSPF2 for cooling and heating operation.
- **On-site flexibility**: All model sizes use a compact design cabinet in one of two footprints. This provides installer flexibility for placing the correct capacity unit on roof curbs, equipment pads, or concrete slabs with the smallest footprint after the internal load has been determined. Field-convertible duct connections from side shot to down shot allow the installer to have greater flexibility with less inventory.
- **Lower installation cost**: Installation time and costs are reduced by easy power wiring and control wiring connections. The small base dimension means less space is required on the ground or roof. All units are completely wired, charged with R-454B, and tested before shipment. Test stations using a state-of-the-art computerized process system are used to ensure product quality. Refrigerant charge and component part numbers are verified using computer bar code scans during assembly. Vital run test statistics such as system pressures and motor currents are monitored and recorded by the system to ensure unit performance. Equal size side supply and return duct connections allow easy connection of ducts to match low crawl spaces without transition pieces.
- **Utility connections made easy**: Electric utility access is provided through the bottom or the side of the unit. Utility connections can be made quickly and with a minimum amount of field labor. A field-supplied electrical disconnect switch must be field installed.
- **Convertible airflow design**: The bottom duct openings are covered when they leave the factory, ready to be used for a side supply and side return application. If a bottom supply and bottom return application is required, remove the two panels from the bottom of the unit and place them in the side supply and side return duct openings. No panel cutting is required and no accessory panel is necessary. The convertible airflow design allows for maximum field flexibility and minimum inventory.

- **Condensate pan**: A corrosion-resistant, long-lasting, watertight pan is positioned below the indoor coil to collect and drain all condensate, preventing build-up of stagnant condensate. The condensate pan conforms to ASHRAE 62-19 standards - Ventilation for Acceptable Indoor Air Quality.
- **Condensate drain**: The 3/4 in. NPT female connection is rigidly mounted to ensure correct fit and a leaktight seal.
- **Durable finish**: The cabinet is made of G90 galvanized steel with a powder paint coating for appearance and protection. The pre-treated galvanized steel provides a better paint-to-steel bond, which resists corrosion and rust creep. The powder paint finish ensures less fading when exposed to sunlight, and provides superior corrosion resistance. The powder paint finish is 1,000 h salt spray tested.
- **Full perimeter base rails**: The easily removable base rails provide a solid foundation for the entire unit and protect the unit during shipment. The rails provide forklift access from all sides, and rigging holes are also provided so an overhead crane can be used to place the units on a roof. On applications where the unit is placed on an equipment pad, the base keeps the unit off the equipment pad to deter corrosion. On applications where height is limited, the base rails can be removed by removing two screws in each corner.
- **Attractive appearance**: The single-piece top cover contains a top-discharge outdoor fan arrangement. The one-piece design adds greater water integrity. Rounded corners with water drip edges add to the attractive appearance.
- **Top discharge**: The top-discharge outdoor fan does not disrupt neighboring areas or dry out vegetation surrounding the unit. The warm air from the top-mounted fan is blown up and away from the structure and any landscaping.
- **Outdoor coil grille**: All models use a stamped slotted design that provides superior impact protection against small objects during transit and after installation.
- **Low operating sound level**: The upward airflow carries the normal operating noise up and away from the living area. The rigid top panel effectively isolates noise. The isolator mounted compressor and the louvered fins of the outdoor coils muffle the normal fan motor and compressor operating sounds. The unique formed base pan also aids in sound attenuation with its structural design.
- **Fan system**: All models operate over a wide range of design conditions with a standard ECM indoor blower motor. These units easily suit all types of applications and provide greater on-site flexibility to meet comfort requirements. The cooling and heating speeds are factory set at test design conditions but can be field adjusted. This allows for maximum comfort capabilities.
- **Loss of charge switch**: All models include a loss of charge switch to provide safe shutdown of the compressor.
- **Simple control circuit**: A printed circuit board contains a status and diagnostic indicator light. Units have a factory installed refrigerant detection system (RDS) and field thermostat wiring connects to the RDS screw terminals. Cooling controls use contactor and relays for simple application and troubleshooting. MATE-N-LOK plug connectors are used. The electrical control box is not located in the compressor compartment. The controls are mounted to allow removal of the separate access panel for troubleshooting and maintenance without affecting the normal system operating pressures. All wiring internal to the unit is color-coded and numbered.
- **Protected compressor**: The compressor is internally protected against high pressure and temperature. This is accomplished by the simultaneous operation of a high-pressure relief valve and a temperature sensor, which protects the compressor if unsuitable operating conditions occur.
- **High-pressure switch**: A high-pressure switch is standard in all units. When abnormal conditions are sensed through the high-pressure switch, the unit locks out, preventing any further operation until it is reset or the problem is corrected.
- **Exclusive coil design**: The grooved copper tubes and enhanced aluminum fin construction of the outdoor coils improve heat transfer for maximum efficiency and durability. Indoor tube and fin coils have all aluminum construction for reliability and efficient heat transfer.
- **Electric heat**: All electric heat models use 6HK electric heat kits, which are available in 460-3-60 from 10 kW to 25 kW. Single-point accessory kits are available.

- **Low maintenance**: Long-life, permanently lubricated indoor blower motor bearings and outdoor fan motor bearings need no annual maintenance, adding greater reliability to the unit. The slide-out blower assembly and indoor coil assembly can be easily removed for cleaning.
- **Easy service access**: Individual access panels provide access to all major components, for example, the compressor, indoor coil, blower, controls, electric heat kit, and air filters, making servicing easy. Removing these panels allows easy removal of components such as the blower assembly for maintenance and troubleshooting.
- **Replacement parts**: The installer requires no special training to replace any of the components of these units. The number of new components has been reduced to minimize the inventory of unique parts.
- **Controls**: Defrost curve options are preloaded into the demand defrost control board for optimized performance based on unit capabilities.
- **Air filter frame kit**: All three-phase PH3 units include an air filter frame kit, which is shipped inside the unit from production. Field installation is required.
- **Air filters**: All three-phase PH3 units include an applicable number of 1 in. air filters, which are shipped inside the unit from production. Field installation is required. Two air filters are required for A base units. Three air filters are required for B base units.

Model number nomenclature

Table 1: Model nomenclature description

Number	Category	Option	Description
1, 2	Model type	PG	Packaged air conditioner with gas heat
		PD	Packaged heat pump with gas heat
		PC	Packaged air conditioner with optional electric heat
		PH	Packaged heat pump with optional electric heat
3	Efficiency	3	13.4 SEER2
		5	15.2 SEER2
4	Refrigerant	E	R-454B
5, 6	Nominal capacity (Btu/h x 1000)	24	24,000 Btu/h or 2 ton
		30	30,000 Btu/h or 2.5 ton
		36	36,000 Btu/h or 3 ton
		42	42,000 Btu/h or 3.5 ton
		48	48,000 Btu/h or 4 ton
		60	60,000 Btu/h or 5 ton
7	Heat type	L	Low NOx <40ng/J
		U	ULNx <14ng/J
		N	Electric heat
8, 9	Gas heating input (Btu/h x 1000)	05	50,000 Btu/h
		06	65,000 Btu/h
		07	75,000 Btu/h
		10	100,000 Btu/h
		12	125,000 Btu/h
		00	Electric heat
10	Control strategy	C	Communicating
		B	Wireless, communicating
		S	Standard, conventional
		W	Wireless, conventional
11	Voltage (V-phase-Hz)	2	208/230-1-60
		3	208/230-3-60
		4	460-3-60
12	Generation	1	First generation
		2	Second generation
		3	Third generation
		4	Fourth generation
13	Style	A	Style A
		B	Style B
		C	Style C
		D	Style D

Model number nomenclature example

Table 2: Model nomenclature example

Number	1, 2	3	4	5, 6	7	8, 9	10	11	12	13
Option	PH	3	E	36	N	00	S	4	1	A

The PH3E36N00S41A model is a packaged heat pump with optional electric heat. It has a 13.4 SEER2 efficiency rating and uses R-454B refrigerant. It has a nominal capacity of 36,000 Btu/h or 3 ton for cooling. It uses a standard control strategy and voltage of 460 V, three phase, 60 Hz. It is a first generation, style A model.

Unit components

Figure 1: Unit components

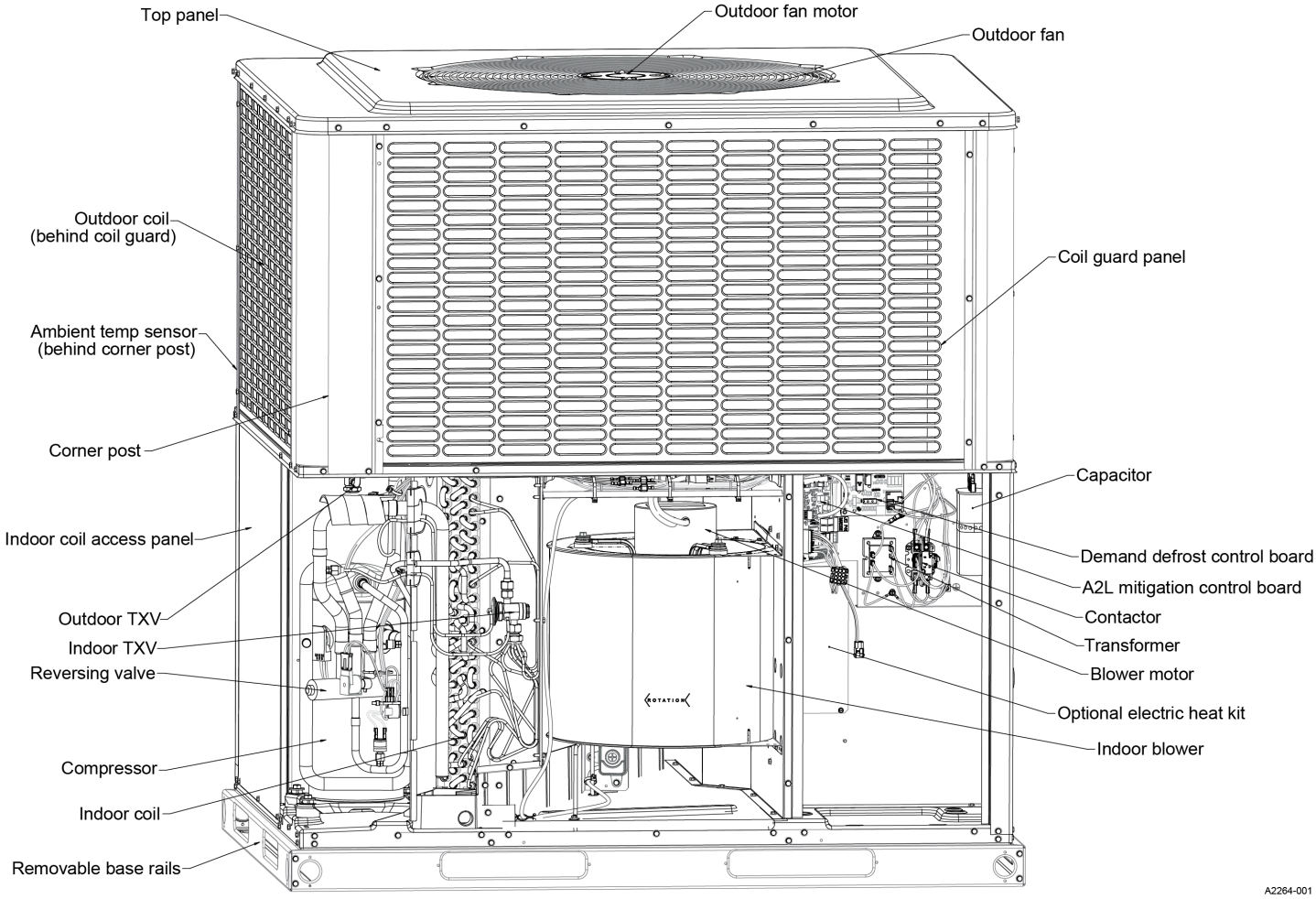

Unit limitations

Table 3: Unit limitations

Model	Voltage (V-phase-Hz)	Unit limitations		
		Applied voltage (V)		Outdoor DB temperature (°F)
		Minimum	Maximum	Maximum
PH3E36N00S4 PH3E48N00S4 PH3E60N00S4	460-3-60	432	504	125

Application limitations

Table 4: Application limitations

Model	Air temperature at outdoor coil (°F)				Air temperature at indoor coil (°F)			
	Minimum		Maximum		Minimum		Maximum	
	DB cool	DB heat	DB cool	DB heat	WB cool	DB heat	WB cool	DB heat
PH3E36N00S4 PH3E48N00S4 PH3E60N00S4	55	0	125	75	57	50	72	80

Accessories

- **Ground mounting kit (S1-1HK1001) or roof mounting kit (S1-1HK1101)**: These kits firmly anchor PG*, PC*, PH*, and PD* packaged units to an equipment pad or support structure. When correctly installed, the kits are approved for ground-mounted or roof-mounted applications, wind load certified, and listed with the State of Florida. See https://floridabuilding.org for this listing.
- **Economizer for downflow applications (S1-2EE04720024, S1-2EE04720124)**: The modulating integrated economizer provides simultaneous operation between the mechanical cooling and economizer operation. The independent blade design ensures correct control and less than 1% leak rate. The economizer includes a hood and mesh bird screen filter integrated into the hood, a dry bulb sensor, and a barometric relief damper. Separate field accessories of single or dual enthalpy kits are also available.
- **Economizer for horizontal applications (S1-2EE04720224, S1-2EE04720324)**: The modulating integrated economizer provides simultaneous operation between the mechanical cooling and economizer operation. The independent blade design ensures correct control and less than 1% leak rate. The economizer includes a hood and mesh bird screen filter integrated into the hood and a dry bulb sensor. Separate field accessories of single enthalpy and dual enthalpy are available.
- **Barometric relief hood (S1-1RD1201)**: Used in conjunction with a horizontal economizer, the barometric relief hood helps to equalize the building pressure that is caused by the fresh air introduced through the economizer fresh air hood.
- **Single or dual enthalpy sensor (S1-HE-69630NS-2D)**: This sensor replaces the supply air temperature dry bulb sensor provided as standard in the economizer kit. The sensor enables improved economizer operation by sensing the dry bulb temperature of indoor supply air plus the enthalpy content of the outdoor air.
- **Duct or unit mount CO_2 kit (S1-2AQ04700924)**: This sensor kit detects CO_2 levels automatically and overrides the economizer when CO_2 levels rise above the preset limits.
- **Wall mount CO_2 kit (S1-2AQ04701024):** This sensor kit detects CO_2 levels automatically and overrides the economizer when CO_2 levels rise above the preset limits.
- **CO_2 sensor kit (S1-2AQ04700824):** This sensor kit detects CO_2 levels automatically and overrides the economizer when CO_2 levels rise above the preset limits.
- **Supply air temperature sensor kit (S1-TE-63616E-2D)**: This outdoor supply air temperature sensor kit is used with economizers.
- **Air filter frame kit (S1-1FF0602, S1-1FF0601), provided**: This kit contains the necessary hardware to field install return air filters into the base unit. The air filter rack is suitable for 1 in. air filters or 2 in. air filters.
- **Air filter (S1-02647812000)**: Washable 1 in. air filter. Two air filters are required for A base units. Three air filters are required for B base units.
- **Motorized fresh air damper (S1-2MD04706224, S1-2MD04706124)**: Designed for duct mounted side supply and return and unit mounted down supply and return applications. The damper is capable of providing 0% to 50% of outdoor air and is field supplied. The damper closes on power loss and includes a hood and screen assembly.

- **Rectangle to round (horizontal) adapter (S1-1AK0110, S1-1AK0111)**: This kit includes one supply and one return air rectangle to round duct adapter. Adapters are preformed and designed to fit over current horizontal duct openings on the base unit. The transition is from rectangle to 12 in. round for the 1AK0110 kit and from rectangle to 14 in. round for the 1AK0111 kit.
- **Rectangle to round (downflow) adapter (S1-1AK0108, S1-1AK0109)**: This kit includes one supply and one return air rectangle to round duct adapter. Adapters are preformed and designed to fit into current downflow duct openings on the roof curb. The transition is from rectangle to 16 in. round for the 1AK0108 kit and from rectangle to 18 in. round for the 1AK0109 kit.
- **Roof curbs (S1-1RC0503, S1-1RC0501)**: NRCA approved curbs provide a correct fit to the base unit for rooftop installations. Curbs are designed to be assembled through hinge pins in each corner. The kit also provides seal strip to ensure an airtight seal. These are 8 in. high roof curbs.
- **Roof curbs (S1-1RC0504, S1-1RC0502)**: NRCA approved curbs provide a correct fit to the base unit for rooftop installations. Curbs are designed for assembly through hinge pins in each corner. The kit also provides seal strip to ensure an airtight seal. These are 14 in. high roof curbs.
- **Transition curb kits (S1-1TC01*)**: These adapter kits allow field use of existing installed roof curbs, matching the unit footprint to Affinity roof curbs or Carrier, Trane, or Goodman roof curbs. Curb adapters are optional for current generation Carrier replacements, but are recommended for previous generation applications. Refer to the *Price Pages* for more details.
- **Manual outdoor damper (S1-1FA1202, S1-1FA1201)**: The damper provides 0% to 50% outdoor air capability and is field adjustable. The damper is designed for duct mounted side supply and return applications and unit mounted down supply and return applications. The damper includes a hood and screen assembly.
- **Loss of charge switch (S1-2LC00024), provided**: This kit provides a loss of charge switch and wiring to provide safe shutdown of the compressor.
- **Low ambient kit (S1-2LA06701024)**: This kit provides the necessary hardware to convert the unit to operate in cooling cycle down to 0ºF. Standard unit operation is 55ºF.
- **Base rail hole cover kit (S1-1HC0101)**: This kit provides the necessary hardware to close off openings in the base rails, for example, to prevent animals from entering.
- **Single-point wiring kits for 6HK electric heat applications (S1-2SPWK031 to 038)**: The kits provide terminal block, fuse block, and wiring to allow units with electric heat kits to be connected to a single source of incoming power.
- **Thermostat**: Compatible thermostat controls are available through accessory sourcing. For optimum performance, these outdoor units are fully compatible with our residential thermostat options available through Source 1. For more information, refer to the *Thermostats & Controllers* section at www.simplygettingthejobdone.com.
- **Wall thermostat**: The units are designed to operate with standard, 24 V electronic non power-stealing and electromechanical thermostats. All units can operate with single-stage heat and single-stage cool thermostats with or without the economizer.

ⓘ **Note:** For additional kit numbers, refer to the *Price Pages*.

Guide specifications

Units shall be assembled at a facility with an ISO 9001:2015-certified Quality Management System. These packaged cooling and heating heat pumps are designed for outdoor installation. Only utility and duct connections are required at the point of installation. Heat pumps provide electric cooling and electric heating, with field-installed electric heat kits from 10 kW to 25 kW for backup supplemental heating operation.

Description

Units shall be factory-assembled, single packaged, heat pumps with electric cooling/electric heating units, designed for outdoor installation. They shall have built-in, equal size, field convertible duct connections for downflow supply and return or horizontal supply and return. The units shall be factory wired, piped, charged with R-454B refrigerant, and factory tested before shipment. All models shall be rated in accordance with DOE and AHRI test procedures for both heating and cooling operation. Units shall be CSA listed to the UL 60335-2-40 (4th edition)/ CAN/CSA-C22.2 No. 60335-2-40:22 standards.

Operating efficiency: All heat pump models shall be rated at a minimum of 13.4 SEER2 and 6.7 HSPF2 for cooling and heating operation rated in accordance with DOE requirements.

Low operating sound level: The upward airflow shall carry the normal operating noise up and away from the living area. The rigid top panel effectively isolates noise. The isolator mounted compressor and the louvered fins of the outdoor coils muffle the normal fan motor and compressor operating sounds. The unique formed base pan also aids in sound attenuation with its structural design. Sound ratings as tested under AHRI test procedures shall be less than 77 dBA for all models.

Unit cabinet

The unit cabinet shall be a single-piece design, with drip edges and no-seam corners to provide optimum water integrity. The unit shall have a rigidly mounted outdoor coil guard to provide protection from objects and personnel after installation. The indoor blower section shall be insulated with foil-faced or foam insulation, fastened to prevent insulation from entering the airstream. The cabinet panels shall be separate and easily removable for servicing and maintenance. The unit shall be built on a formed, design base pan, with embossments at critical points to add strength and rigidity and aid in minimizing sound. Full perimeter base rails shall be provided to ensure reliable transit of equipment and facilitate overhead rigging, allowing truck access and correct sealing on roof curb applications. Base rails shall be easily removable if their removal is required to lower the unit height. Filters shall be field installed, furnished, and accessible through a removable access door, sealed airtight. The unit's vertical discharge and return duct configuration shall be designed to fit between standard 24 in. O.C. beams without modification to the building structure, ductwork, and base unit.

Durable finish: The cabinet shall be made of G90 galvanized steel with a powder paint coating for appearance and protection. The pre-treated galvanized steel provides a better paint-to-steel bond, which resists corrosion and rust creep. The powder paint finish ensures less fading when exposed to sunlight, and provides superior corrosion resistance. The powder paint finish is 1,000 h salt spray tested.

On-site flexibility: All model sizes shall use a compact design cabinet in one of two footprints. This provides installer flexibility for placing the correct capacity unit on roof curbs or equipment pads or concrete slabs with the smallest footprint after the internal load has been determined. Field convertible duct connections from side shot to down shot allow the installer to have greater flexibility with less inventory.

Attractive appearance: A single-piece top cover containing a top-discharge outdoor fan arrangement shall be used. The one-piece design adds greater water integrity. Rounded corners with water drip edges add to the attractive appearance and prevent water penetration.

Convertible airflow design: The bottom duct openings shall be covered when they leave the factory, ready to be used for a side supply and side return application. If a bottom supply and bottom return application is

required, remove the two panels from the bottom of the unit and place them in the side supply and side return duct openings. No panel cutting is required and no accessory panel is necessary. The convertible airflow design allows for maximum field flexibility and minimum inventory.

Utility connections made easy: Electric utility access shall be provided through the bottom or the side of the unit. Utility connections must be made quickly and with a minimum amount of field labor. A field-supplied electrical disconnect switch must be field installed.

Easy service access: Individual access panels shall provide access to all major components, for example, the compressor, indoor coil, blower, controls, electric heat kit, and air filters, making servicing easy. Removing these panels allows easy removal of components such as the blower assembly for maintenance and ease of troubleshooting.

Top discharge: The top-discharge outdoor fan shall not disrupt neighboring areas or dry out vegetation surrounding the unit. The warm air from the top mounted fan is blown up and away from the structure and any landscaping.

Outdoor coil grille: All models shall use a stamped slotted design that provides superior impact protection against small objects during transit and after installation.

Indoor blower assembly: The blower shall be a direct drive design. The blower wheel shall be a double-inlet type with forward-curved blades, dynamically balanced to operate smoothly throughout the entire range of operation. Bearings shall be sealed and permanently lubricated for longer life and no maintenance. The blower assembly shall be a slide-out design for easy removal and cleaning. Indoor blower motors shall be equipped with a standard high-efficiency brushless DC motor.

Outdoor fan assembly: The outdoor fan shall be a direct driven propeller type, discharge air vertically, have aluminum blades riveted to a corrosion resistant steel spider bracket, and be statically balanced for smooth operation. The outdoor fan motor shall be totally enclosed with permanently lubricated bearings and internally protected against overload conditions.

Refrigerant components

Protected compressor: The compressor shall be a fully hermetic type, direct drive compressor, that is internally protected against high pressure and temperature. This is accomplished by the simultaneous operation of a high-pressure relief valve and a temperature sensor, which protects the compressor if unsuitable operating conditions occur. The hermetic motor shall be suction gas cooled and have a voltage range of ± 10% of the unit rating plate voltage. Compressors shall have internal isolation and sound muffling to minimize vibration and noise, and be externally isolated on a dedicated, independent mounting.

Indoor coil: The indoor coil shall be a direct expansion, draw through design and have aluminum plate fins mechanically bonded to seamless internally enhanced aluminum tubes with all joints brazed.

Condensate pan: A corrosion-resistant, long-lasting, watertight pan shall be positioned below the indoor coil to collect and drain all condensate, preventing build-up of stagnant condensate. The condensate pan conforms to ASHRAE 62-19 standards - Ventilation for Acceptable Indoor Air Quality.

Condensate drain: The 3/4 in. NPT female connection shall be rigidly mounted to ensure correct fit and a leaktight seal.

Outdoor coils: Outdoor coils shall have aluminum plate fins mechanically bonded to seamless internally enhanced copper tubes with all joints brazed, and be a draw through design.

Refrigerant circuit and refrigerant safety components shall include the following:

- Thermal expansion valves (TXVs) that are factory mounted and provided
- Filter drier or strainer to eliminate any foreign matter
- Reversing valve to control refrigerant flow

Controls

Simple control circuit: A printed circuit board shall contain a status and diagnostic indicator light. Units shall have a factory installed refrigerant detection system (RDS) and field thermostat wiring shall connect to the RDS screw terminals. Cooling controls shall use contactor and relays for simple application and troubleshooting. MATE-N-LOK plug connectors shall be used. The electrical control box shall not be located in the compressor compartment. The controls shall be mounted to allow removal of the separate access panel for troubleshooting and maintenance without affecting the normal system operating pressures. All wiring internal to the unit shall be color-coded and numbered.

Controls: Defrost curve options shall be preloaded into the demand defrost control board for optimized performance based on unit capabilities.

High-pressure switch: A high-pressure switch shall be standard in all units. When abnormal conditions are sensed through the high-pressure switch, the unit locks out, preventing any further operation until it is reset or the problem is corrected.

Factory testing: Installation time and costs shall be reduced by easy power wiring and control wiring connections. All units shall be completely wired, charged with R-454B, and tested before shipment. Test stations using a state-of-the-art computerized process system shall be used to ensure product quality. Refrigerant charge and component part numbers shall be verified using computer bar code scans during assembly. Vital run test statistics such as system pressures and motor currents shall be monitored and recorded by the system to ensure unit performance. This data could be provided by serial number tracking if requested.

Electric heat: All electric heat models use 6HK electric heat kits, which are available in 460-3-60 from 10 kW to 25 kW. Electric heat kits must be certified to UL 60335-2-40 (4th edition) standard requirements. Single-point accessory kits are available.

Physical data

Table 5: Physical data

Model		PH3E36N00S4	PH3E48N00S4	PH3E60N00S4
Nominal tonnage		**3.0**	**4.0**	**5.0**
AHRI cooling performance	**AHRI net capacity (MBH)**	35.4	48.5	57.5
	EER2	11.1	11.1	11.1
	SEER2	13.4	13.4	13.4
	Nominal CFM	1200	1700	1825
	System power (kW)	3.2	4.4	5.2
	Refrigerant type	R-454B	R-454B	R-454B
	Refrigerant charge (lb-oz)	7-5	10-14	11-5
AHRI heating performance	**47°F capacity rating (MBH)**	34.0	47.0	56.0
	System power (kW/COP)	2.8/3.6	3.7/3.7	4.8/3.4
	17°F capacity rating (MBH)	21.0	28.6	34.2
	HSPF2 (Btu/Wh)	6.7	6.7	6.7
Dimensions	**Length (in.)**	51 1/4	51 1/4	51 1/4
	Width (in.)	45 3/4	45 3/4	45 3/4
	Height (in.)	47	50	55
Operating weight (lb)		423	482	499
Compressor type		Scroll	Scroll	Scroll
Outdoor coil data	**Face area (sq ft)**	17.6	20.3	26.4
	Rows	2	2	2
	Fins per inch	22	22	22
	Tube diameter (mm)	7	7	7
	Refrigerant control	TXV	TXV	TXV
Indoor coil data	**Face area (sq ft)**	6.3	6.3	6.3
	Rows	3	4	4
	Fins per inch	16	16	16
	Tube diameter (in.)	3/8	3/8	3/8
	Refrigerant control	TXV	TXV	TXV
Outdoor fan data	**Fan diameter (in.)**	26	26	26
	Type	Propeller	Propeller	Propeller
	Drive type	Direct	Direct	Direct
	Number of speeds	1	1	1
	Motor (hp)	1/3	1/3	1/3
	RPM	850	850	850
	Nominal total CFM	3550	3850	4100
Direct drive indoor blower data	**Blower size (in.)**	11 x 10	11 x 10	11 x 10
	Type	Centrifugal	Centrifugal	Centrifugal
	Motor (hp)	1/2	1	1
	RPM (maximum)	1400	1400	1400
	Frame size (in.)	48	48	48
Filter size		B	B	B

ⓘ **Note:** You must size field-supplied external filters so as not to exceed 300 ft/min air velocity through disposable filters. All three-phase models are shipped with an air filter frame kit and filters that you can install in the field. Refer to the instructions supplied with the kit for replacement filter sizes. Filter size A is 20 in. x 20 in. Filter size B is 20 in. x 30 in.

Cooling performance data

Table 6: Cooling performance data for PH3E36N00S4 unit - 3 ton

Condenser entering air temperature DB/WB (°F)	ID SCFM	1000					1200					1400				
	IDDB (°F)	80	80	75	80	80	80	80	75	80	80	80	80	75	80	80
	IDWB (°F)	57	62	62	67	72	57	62	62	67	72	57	62	62	67	72
55/45	Total capacity (MBH)	38.5	40.3	40.0	42.0	44.3	40.5	41.5	41.0	43.1	46.0	41.6	41.9	41.4	44.0	47.0
	Sensible capacity (MBH)	38.5	33.3	28.3	26.8	21.5	40.5	35.8	30.1	28.4	23.1	41.6	37.4	31.1	29.7	24.1
	Total power (kW)	1.88	1.87	1.88	1.87	1.87	1.94	1.94	1.95	1.95	1.95	2.09	2.10	2.10	2.10	2.11
65/55	Total capacity (MBH)	37.9	35.9	38.2	41.6	44.9	38.9	37.8	39.2	42.7	46.0	39.3	39.0	39.7	43.2	46.5
	Sensible capacity (MBH)	27.3	35.9	32.5	27.3	22.1	29.3	37.8	35.3	29.3	23.3	30.8	39.0	37.4	30.8	24.1
	Total power (kW)	2.06	2.06	2.06	2.06	2.06	2.13	2.13	2.13	2.13	2.13	2.29	2.29	2.29	2.29	2.29
75/63	Total capacity (MBH)	36.5	34.9	36.7	40.1	43.5	37.5	36.9	37.9	41.1	44.6	37.8	38.1	38.3	41.5	45.0
	Sensible capacity (MBH)	26.9	34.9	32.1	26.7	21.2	29.2	36.9	35.4	29.0	22.6	31.0	38.1	37.8	30.9	23.5
	Total power (kW)	2.28	2.27	2.27	2.28	2.28	2.35	2.35	2.35	2.35	2.36	2.50	2.50	2.50	2.51	2.51
85/69	Total capacity (MBH)	34.9	33.5	35.0	38.4	41.8	35.7	35.5	36.0	39.3	42.7	36.1	36.7	36.7	39.6	43.1
	Sensible capacity (MBH)	25.8	33.5	31.1	25.6	20.0	28.3	35.5	34.6	28.1	21.4	30.4	36.7	36.7	30.2	22.5
	Total power (kW)	2.51	2.50	2.51	2.52	2.53	2.58	2.58	2.58	2.59	2.60	2.74	2.74	2.74	2.75	2.76
95/75	Total capacity (MBH)	32.7	31.6	32.6	35.8	39.1	33.4	33.4	33.4	36.6	39.9	33.7	34.5	34.5	36.8	40.2
	Sensible capacity (MBH)	24.5	31.6	29.8	24.1	18.4	27.0	33.4	33.3	26.7	19.9	29.2	34.5	34.5	28.8	21.0
	Total power (kW)	2.73	2.73	2.73	2.74	2.75	2.80	2.80	2.80	2.81	2.82	2.96	2.96	2.96	2.97	2.98
105/83	Total capacity (MBH)	29.3	28.7	29.2	32.2	35.2	30.0	30.4	30.4	32.8	35.9	30.1	31.4	31.4	33.0	36.1
	Sensible capacity (MBH)	22.3	28.7	27.7	21.8	15.7	24.8	30.4	30.4	24.1	17.2	27.2	31.4	31.4	26.4	18.3
	Total power (kW)	3.04	3.04	3.04	3.05	3.06	3.11	3.12	3.12	3.12	3.13	3.27	3.27	3.27	3.27	3.29
115/89	Total capacity (MBH)	25.7	25.6	25.8	28.0	30.9	26.4	27.0	27.1	28.8	31.6	26.4	27.9	27.9	29.0	31.8
	Sensible capacity (MBH)	20.2	25.6	25.4	20.3	13.4	22.6	27.0	27.1	21.9	14.6	25.3	27.9	27.9	24.1	15.8
	Total power (kW)	3.40	3.40	3.40	3.40	3.41	3.46	3.47	3.47	3.47	3.48	3.62	3.63	3.63	3.62	3.64
125/95	Total capacity (MBH)	23.8	24.2	24.0	25.6	26.1	23.5	25.3	24.6	24.9	26.3	23.0	25.9	24.6	23.6	24.4
	Sensible capacity (MBH)	19.3	24.2	24.0	17.7	9.0	21.4	25.3	24.6	19.4	11.1	22.9	25.9	24.6	20.9	10.4
	Total power (kW)	3.80	3.85	3.80	3.78	3.77	3.88	3.93	3.89	3.86	3.86	4.08	4.09	4.08	4.05	4.06

Table 7: Cooling performance data for PH3E48N00S4 unit - 4 ton

Condenser entering air temperature DB/WB (°F)	ID SCFM	1500					1700					1900				
	IDDB (°F)	80	80	75	80	80	80	80	75	80	80	80	80	75	80	80
	IDWB (°F)	57	62	62	67	72	57	62	62	67	72	57	62	62	67	72
55/45	Total capacity (MBH)	54.4	57.9	57.5	61.1	65.6	57.6	59.2	58.7	62.6	67.1	59.1	60.1	59.6	63.3	66.1
	Sensible capacity (MBH)	54.4	49.7	42.5	40.5	33.9	57.6	52.6	44.6	42.8	36.1	59.1	55.1	46.4	44.8	36.9
	Total power (kW)	2.79	2.45	2.45	2.46	2.48	2.62	2.62	2.63	2.63	2.62	2.80	2.80	2.80	2.86	3.21
65/55	Total capacity (MBH)	54.6	51.9	55.0	59.7	64.7	55.2	53.3	55.6	60.4	65.5	55.5	54.5	55.9	60.9	65.9
	Sensible capacity (MBH)	40.7	51.9	48.0	41.0	34.1	42.3	53.3	50.3	42.5	34.9	43.6	54.5	52.5	43.9	35.5
	Total power (kW)	2.72	2.72	2.72	2.72	2.71	2.89	2.89	2.89	2.88	2.88	3.06	3.06	3.05	3.05	3.05
75/63	Total capacity (MBH)	51.8	49.8	52.0	56.7	61.6	52.3	51.3	52.4	57.3	62.2	52.6	52.4	52.8	57.7	62.6
	Sensible capacity (MBH)	39.4	49.8	47.0	39.5	32.0	41.2	51.3	49.7	41.3	33.0	42.8	52.4	52.0	42.9	33.8
	Total power (kW)	3.03	3.03	3.03	3.04	3.05	3.20	3.20	3.20	3.21	3.22	3.37	3.37	3.37	3.38	3.39
85/69	Total capacity (MBH)	48.7	47.3	48.7	53.3	58.1	49.1	48.7	49.1	53.9	58.6	49.3	49.8	49.8	54.2	58.9
	Sensible capacity (MBH)	37.7	47.3	45.4	37.5	29.6	39.7	48.7	48.1	39.5	30.6	41.7	49.8	49.8	41.4	31.5
	Total power (kW)	3.44	3.43	3.44	3.46	3.50	3.61	3.61	3.61	3.64	3.67	3.79	3.79	3.79	3.81	3.84
95/75	Total capacity (MBH)	45.5	44.6	45.5	49.9	54.6	45.9	46.0	46.0	50.4	55.1	46.2	47.1	47.1	50.7	55.4
	Sensible capacity (MBH)	35.8	44.6	43.2	35.3	27.0	38.1	46.0	46.0	37.5	28.1	40.1	47.1	47.1	39.7	29.1
	Total power (kW)	3.84	3.84	3.84	3.88	3.92	4.02	4.02	4.02	4.05	4.10	4.19	4.20	4.20	4.23	4.28
105/83	Total capacity (MBH)	41.0	40.9	41.0	45.0	49.3	41.3	42.1	42.1	45.4	49.7	41.5	43.0	43.0	45.5	49.8
	Sensible capacity (MBH)	33.3	40.9	40.9	32.8	24.4	35.5	42.1	42.1	35.1	25.6	37.8	43.0	43.0	37.3	26.7
	Total power (kW)	4.28	4.28	4.28	4.32	4.37	4.45	4.46	4.46	4.49	4.55	4.63	4.64	4.64	4.67	4.72
115/89	Total capacity (MBH)	36.6	37.1	37.1	40.1	43.9	36.7	38.0	38.1	40.3	44.4	36.8	38.8	38.8	40.4	44.2
	Sensible capacity (MBH)	30.8	37.1	37.1	30.2	21.8	33.2	38.0	38.1	32.6	22.9	35.2	38.8	38.8	34.8	24.2
	Total power (kW)	4.77	4.77	4.77	4.81	4.86	4.94	4.96	4.96	4.98	5.05	5.12	5.14	5.14	5.16	5.22
125/95	Total capacity (MBH)	31.3	31.4	32.5	35.3	39.4	30.8	31.0	32.7	35.3	39.6	30.5	30.5	32.7	35.1	38.9
	Sensible capacity (MBH)	28.2	31.4	32.5	28.2	20.3	29.9	31.0	32.7	30.2	20.5	30.5	30.5	32.7	32.1	19.0
	Total power (kW)	5.40	5.52	5.42	5.35	5.31	5.58	5.70	5.60	5.53	5.49	5.75	5.87	5.78	5.71	5.66

Table 8: Cooling performance data for PH3E60N00S4 unit - 5 ton

Condenser entering air temperature DB/WB (°F)	ID SCFM	1700					1900					2100				
	IDDB (°F)	80	80	75	80	80	80	80	75	80	80	80	80	75	80	80
	IDWB (°F)	57	62	62	67	72	57	62	62	67	72	57	62	62	67	72
55/45	Total capacity (MBH)	60.8	64.3	63.5	69.6	77.3	62.1	64.9	64.9	70.8	78.8	63.3	65.7	65.7	72.4	80.5
	Sensible capacity (MBH)	60.8	54.4	46.7	47.2	42.1	62.1	56.2	48.5	49.1	43.9	63.3	57.9	49.8	51.2	45.8
	Total power (kW)	1.95	1.96	1.96	1.96	1.98	2.14	2.15	2.15	2.16	2.18	2.33	2.34	2.34	2.36	2.37
65/55	Total capacity (MBH)	62.4	59.7	62.7	68.2	73.9	62.9	61.0	63.3	68.8	74.4	63.2	62.0	63.5	69.1	74.7
	Sensible capacity (MBH)	47.1	59.7	55.3	47.3	39.3	48.6	61.0	57.6	48.8	40.0	49.9	62.0	59.7	50.2	40.6
	Total power (kW)	2.31	2.30	2.31	2.33	2.36	2.51	2.50	2.51	2.53	2.56	2.71	2.70	2.71	2.73	2.76
75/63	Total capacity (MBH)	59.0	57.2	59.3	64.4	69.7	59.4	58.5	59.8	64.8	70.2	59.5	59.6	60.1	65.2	70.4
	Sensible capacity (MBH)	44.8	57.2	53.6	44.7	35.6	46.7	58.5	56.4	46.5	36.5	48.4	59.6	58.9	48.2	37.3
	Total power (kW)	2.73	2.71	2.73	2.76	2.80	2.93	2.92	2.93	2.96	3.00	3.12	3.12	3.13	3.16	3.20
85/69	Total capacity (MBH)	55.3	54.1	55.5	60.4	65.4	55.6	55.3	55.8	60.7	65.8	55.9	56.4	56.4	60.9	66.0
	Sensible capacity (MBH)	42.1	54.1	51.1	41.6	31.9	44.1	55.3	54.0	43.6	32.9	46.0	56.4	56.4	45.4	33.8
	Total power (kW)	3.21	3.20	3.21	3.26	3.31	3.42	3.41	3.42	3.46	3.52	3.62	3.62	3.62	3.66	3.72
95/75	Total capacity (MBH)	52.1	51.3	52.2	57.1	62.0	52.5	52.6	52.7	57.3	62.9	52.7	53.7	53.7	57.6	63.1
	Sensible capacity (MBH)	40.6	51.3	49.4	39.9	29.8	42.7	52.6	52.4	42.0	30.9	44.8	53.7	53.7	44.0	31.8
	Total power (kW)	3.79	3.78	3.79	3.85	3.92	4.00	4.00	4.00	4.05	4.13	4.20	4.21	4.21	4.26	4.33
105/83	Total capacity (MBH)	46.9	46.6	46.8	51.2	55.9	47.2	47.9	47.9	51.5	56.0	47.3	49.1	48.8	51.6	56.1
	Sensible capacity (MBH)	36.9	46.6	46.2	36.1	25.9	39.2	47.9	47.9	38.4	26.8	41.5	49.1	48.8	40.4	27.8
	Total power (kW)	4.44	4.43	4.44	4.50	4.58	4.64	4.65	4.65	4.71	4.79	4.85	4.87	4.87	4.91	5.00
115/89	Total capacity (MBH)	41.5	41.8	41.9	45.4	49.4	41.7	42.7	42.7	45.6	49.6	41.7	43.5	43.5	45.6	49.6
	Sensible capacity (MBH)	33.2	41.8	41.7	32.1	21.7	35.5	42.7	42.7	34.4	22.8	38.0	43.5	43.5	36.6	23.7
	Total power (kW)	5.17	5.17	5.17	5.23	5.32	5.38	5.39	5.39	5.44	5.53	5.58	5.60	5.61	5.64	5.74
125/95	Total capacity (MBH)	34.5	36.0	35.2	39.6	45.7	34.6	36.8	35.9	39.9	45.7	34.5	37.4	36.5	40.0	45.7
	Sensible capacity (MBH)	28.1	36.0	35.2	28.4	20.1	30.5	36.8	35.9	30.8	21.3	33.0	37.4	36.5	33.2	22.4
	Total power (kW)	5.97	5.98	5.98	6.05	6.16	6.17	6.20	6.20	6.26	6.37	6.37	6.42	6.41	6.46	6.58

Heating performance data

Table 9: Heating performance data for PH3E36N00S4 unit - 3 ton

Air temperature entering outdoor coil (°F)	Air temperature entering indoor coil (°F)	ID SCFM								
		1000			1200			1400		
		MBH	COP	kW	MBH	COP	kW	MBH	COP	kW
60	60	41.1	4.41	2.73	42.2	4.64	2.67	43.1	4.64	2.72
	70	40.5	3.95	3.01	41.6	4.13	2.95	42.3	4.17	2.97
	80	40.0	3.49	3.36	40.8	3.67	3.26	41.4	3.72	3.26
47	60	35.1	3.93	2.62	35.4	4.05	2.56	35.7	3.96	2.64
	70	34.7	3.48	2.92	34.8	3.58	2.85	34.5	3.50	2.89
	80	34.1	3.08	3.24	33.5	3.11	3.16	34.3	3.17	3.17
40	60	32.0	3.66	2.56	32.1	3.73	2.52	32.3	3.66	2.58
	70	31.5	3.25	2.84	31.0	3.27	2.78	30.7	3.16	2.84
	80	31.0	2.86	3.17	30.4	2.88	3.10	30.9	2.91	3.11
30	60	27.8	3.27	2.49	27.5	3.26	2.47	27.6	3.19	2.54
	70	27.2	2.89	2.76	27.2	2.93	2.72	26.8	2.80	2.80
	80	26.4	2.48	3.13	26.5	2.57	3.02	26.0	2.48	3.08
17	60	21.7	2.66	2.39	21.8	2.68	2.38	22.0	2.59	2.49
	70	21.1	2.34	2.64	21.1	2.35	2.64	21.3	2.28	2.74
	80	20.4	1.99	2.99	20.5	2.03	2.95	20.7	1.99	3.04
10	60	20.0	2.48	2.37	20.2	2.50	2.36	20.5	2.44	2.46
	70	19.1	2.11	2.65	19.4	2.19	2.60	19.8	2.15	2.69
	80	18.6	1.86	2.92	18.7	1.89	2.90	19.0	1.86	2.99

Table 10: Heating performance data for PH3E48N00S4 unit - 4 ton

Air temperature entering outdoor coil (°F)	Air temperature entering indoor coil (°F)	ID SCFM								
		1500			1700			1900		
		MBH	COP	kW	MBH	COP	kW	MBH	COP	kW
60	60	57.2	4.71	3.56	57.3	4.64	3.62	57.3	4.54	3.70
	70	56.1	4.19	3.92	56.1	4.16	3.95	56.1	4.08	4.03
	80	54.9	3.72	4.33	54.9	3.70	4.35	54.8	3.65	4.40
47	60	49.2	4.23	3.41	49.3	4.15	3.48	49.3	4.04	3.58
	70	48.3	3.79	3.74	48.3	3.73	3.80	48.3	3.63	3.90
	80	47.4	3.36	4.14	47.4	3.32	4.19	47.3	3.26	4.26
40	60	43.9	3.87	3.32	43.9	3.77	3.41	43.8	3.63	3.53
	70	43.0	3.46	3.64	43.0	3.39	3.71	42.9	3.29	3.82
	80	42.1	3.08	4.01	42.1	3.02	4.08	42.0	2.95	4.17
30	60	37.3	3.39	3.22	37.3	3.28	3.33	37.1	3.15	3.45
	70	36.0	3.00	3.52	36.3	2.94	3.62	36.2	2.85	3.73
	80	35.4	2.67	3.88	35.4	2.62	3.97	35.4	2.55	4.06
17	60	29.0	2.75	3.10	29.6	2.68	3.23	29.4	2.57	3.36
	70	28.4	2.46	3.38	28.6	2.40	3.49	28.5	2.31	3.62
	80	27.5	2.16	3.74	27.7	2.12	3.83	27.7	2.06	3.94
10	60	23.2	2.23	3.05	23.3	2.16	3.17	23.2	2.06	3.30
	70	22.5	1.99	3.32	22.6	1.93	3.44	22.6	1.86	3.56
	80	22.0	1.76	3.66	22.1	1.72	3.77	22.1	1.67	3.88

Table 11: Heating performance data for PH3E60N00S4 unit - 5 ton

Air temperature entering outdoor coil (°F)	Air temperature entering indoor coil (°F)	ID SCFM								
		1700			1900			2100		
		MBH	COP	kW	MBH	COP	kW	MBH	COP	kW
60	60	71.7	4.47	4.70	72.4	4.50	4.71	72.8	4.47	4.77
	70	70.3	3.97	5.18	70.8	4.00	5.18	71.4	4.01	5.22
	80	68.7	3.51	5.73	69.4	3.56	5.71	69.9	3.58	5.73
47	60	57.9	3.94	4.31	57.6	3.87	4.37	57.2	3.77	4.45
	70	56.9	3.49	4.78	56.5	3.44	4.81	56.1	3.37	4.88
	80	55.7	3.07	5.32	55.2	3.04	5.33	54.9	3.00	5.37
40	60	51.0	3.61	4.14	50.0	3.48	4.21	49.4	3.35	4.32
	70	49.9	3.17	4.61	49.0	3.09	4.65	48.4	3.00	4.73
	80	48.8	2.79	5.13	48.1	2.73	5.16	47.5	2.66	5.22
30	60	41.7	3.12	3.91	40.5	2.94	4.04	39.6	2.81	4.13
	70	41.0	2.77	4.34	39.8	2.62	4.45	38.9	2.52	4.53
	80	40.1	2.42	4.86	38.9	2.30	4.95	38.1	2.23	5.01
17	60	34.4	2.71	3.72	34.5	2.62	3.87	34.6	2.52	4.02
	70	33.8	2.40	4.13	33.9	2.32	4.28	34.0	2.26	4.41
	80	33.1	2.10	4.62	33.2	2.05	4.75	33.2	1.99	4.90
10	60	28.0	2.26	3.63	28.6	2.21	3.79	29.0	2.15	3.96
	70	27.6	2.00	4.03	28.0	1.96	4.18	28.5	1.92	4.35
	80	26.9	1.75	4.51	27.4	1.72	4.66	27.9	1.70	4.82

Cooling sound performance data

Table 12: Cooling sound performance data

Model	Sound rating (dBA)	Octave band centerline frequency (Hz)						
		125	250	500	1000	2000	4000	8000
PH3E36N00S4	72	78.6	69.8	67.1	67.9	60.6	54.9	49.1
PH3E48N00S4	72	80.8	70.2	68.1	67.6	62.0	56.5	51.6
PH3E60N00S4	72	78.9	69.9	66.6	66.7	61.2	55.7	52.6

ⓘ **Note:** The sound rating shown is rated in accordance with AHRI Standard 270.

Heating sound performance data

Table 13: Heating sound performance data

Model	Sound rating (dBA)	Octave band centerline frequency (Hz)						
		125	250	500	1000	2000	4000	8000
PH3E36N00S4	73	80.2	71.0	68.3	68.6	60.7	55.9	52.7
PH3E48N00S4	73	80.5	70.1	68.4	68.5	62.2	57.3	52.7
PH3E60N00S4	74	82.6	71.6	69.1	68.4	62.1	57.1	53.0

ⓘ **Note:** The sound rating shown is rated in accordance with AHRI Standard 270.

Unit dimensions and access locations

Figure 2: Unit dimensions and access locations

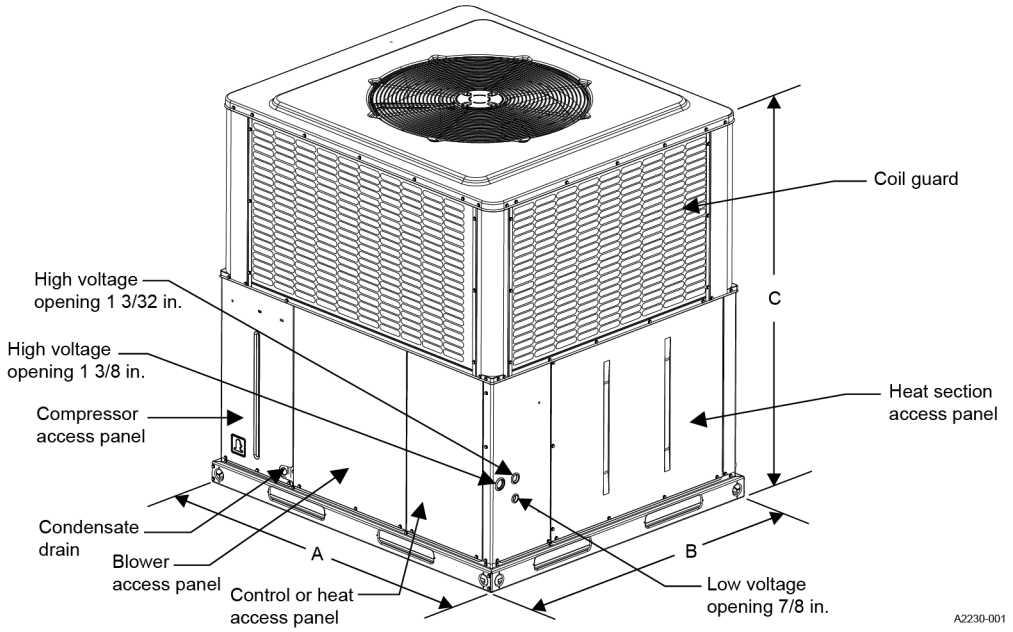

Table 14: Unit dimensions

Model	Dimensions (in.)		
	A	B	C
PH3E36N00S4	51 1/4	45 3/4	47
PH3E48N00S4	51 1/4	45 3/4	50
PH3E60N00S4	51 1/4	45 3/4	55

Weights and dimensions

Figure 3: Center of gravity

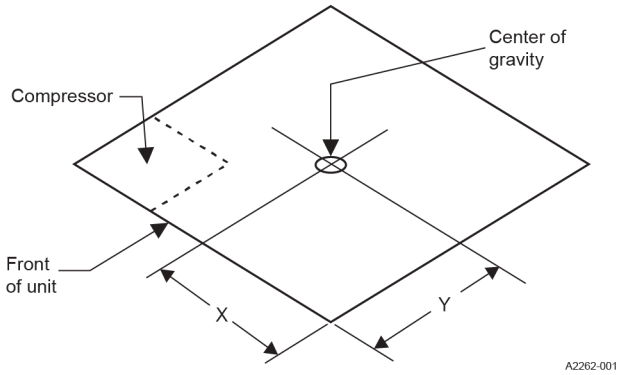

Table 15: Weights and dimensions

Model	Weight (lb)		Center of gravity (in.)	
	Shipping	Operating	X	Y
PH3E36N00S41	428	423	29	18
PH3E48N00S41	487	482	30	18
PH3E60N00S41	504	499	29	18

Unit clearances

Table 16: Unit clearances

Direction	Distance (in.)	Direction	Distance (in.)
Top	36	Right side	36
Side opposite ducts	36	Left side	24
Duct panel	6	Bottom	1

Note:

- For 20 kW and 25 kW electric heat kits, provide a minimum clearance of 1 in. on all sides of the supply air duct for the first 3 ft of the supply air duct. 0 in. clearance is acceptable on all sides of the supply air duct for the remaining length of the supply air duct. For all other electric heat kits, 0 in. clearance is acceptable on all sides of the supply air duct for the entire length of the supply air duct.
- Install units outdoors. Make sure that overhanging structures or shrubs do not obstruct the outdoor air discharge outlet.
- You can install units on combustible materials made from wood or class A, B, or C roof covering materials if the factory base rails are left in place as shipped.
- For units installed on a roof curb, you can reduce the minimum clearance between combustible roof curb material and the supply air duct from 1 in. to 1/2 in.

Electrical data for 460-3-60 single source power

Table 17: Electrical data for 460-3-60 single source power

Model	Compressor			Outdoor fan motor	Blower motor	Electric heat option				Total unit		Unit less heater	
	RLA	LRA	MCC	FLA	FLA	Electric heat kit model	Electric heat kit (kW)	Stages	Electric heat kit (A)	MCA (A)	MOP (A)	MCA (A)	MOP (A)
PH3E36	5.8	44.3	9.0	0.87	2.3	none	—	—	—	10.4	15	10.4	15
						6HK06501046	8.8	1	11.1	24.3	25	10.4	15
						6HK06501546	13.2	1	16.6	31.2	35	10.4	15
PH3E48	6.0	49.4	9.4	0.87	4.3	none	—	—	—	12.7	15	12.7	15
						6HK06501046	8.8	1	11.1	26.5	30	12.7	15
						6HK06501546	13.2	1	16.6	33.4	35	12.7	15
						6HK06502046	17.6	1	22.1	40.3	45	12.7	15
PH3E60	7.8	69.0	11.0	0.87	3.7	none	—	—	—	14.3	20	14.3	20
						6HK06501046	8.8	1	11.1	28.2	30	14.3	20
						6HK06501546	13.2	1	16.6	35.1	40	14.3	20
						6HK06502046	17.6	1	22.1	42.0	45	14.3	20
						6HK06502546	22.0	1	27.7	48.9	50	14.3	20

Note:
- 460-3-60 indicates 460 V, three phase, 60 Hz.
- MCA indicates minimum circuit ampacity.
- MOP indicates maximum overcurrent protection device. This must be a HACR circuit breaker or time delay fuse. The HACR circuit breaker or time delay fuse must be field installed. The maximum overcurrent protection must be in accordance with the UL 60335-2-40 standard (fourth edition).
- Single-source power MCA and MOP requirements are given in this table for reference if the unit is installed with a field-installed single-point power modification.
- If an electric heat kit is installed and single-point wiring is required, a single-point wiring kit is required.

Electrical data for 460-3-60 multi source power

Table 18: Electrical data for 460-3-60 multi source power

Model	Compressor			Outdoor fan motor	Blower motor	Electric heat option				Circuit 1 (unit less electric heat kit)		Circuit 2 (electric heat kit)	
	RLA	LRA	MCC	FLA	FLA	Electric heat kit model	Electric heat kit (kW)	Stages	Electric heat kit (A)	MCA (A)	MOP (A)	MCA (A)	MOP (A)
PH3E36	5.8	44.3	9.0	0.87	2.3	none	—	—	—	10.4	15	—	—
						6HK06501046	8.8	1	11.1	10.4	15	13.8	15
						6HK06501546	13.2	1	16.6	10.4	15	20.7	25
PH3E48	6.0	49.4	9.4	0.87	4.3	none	—	—	—	12.7	15	—	—
						6HK06501046	8.8	1	11.1	12.7	15	13.8	15
						6HK06501546	13.2	1	16.6	12.7	15	20.7	25
						6HK06502046	17.6	1	22.1	12.7	15	27.7	30
PH3E60	7.8	69.0	11.0	0.87	3.7	none	—	—	—	14.3	20	—	—
						6HK06501046	8.8	1	11.1	14.3	20	13.8	15
						6HK06501546	13.2	1	16.6	14.3	20	20.7	25
						6HK06502046	17.6	1	22.1	14.3	20	27.7	30
						6HK06502546	22.0	1	27.7	14.3	20	34.5	35

Note:
- 460-3-60 indicates 460 V, three phase, 60 Hz.
- MCA indicates minimum circuit ampacity.
- MOP indicates maximum overcurrent protection device. This must be a HACR circuit breaker or time delay fuse.

Electric heat performance data for 460-3-60

Table 19: Electric heat performance data for 460-3-60

Electric heat kit model	Nominal kW at 480 V	Total heat	
		kW	MBH
		460 V	460 V
6HK06501046	9.6	8.8	30.1
6HK06501546	14.4	13.2	45.1
6HK06502046	19.2	17.6	60.2
6HK06502546	24.0	22.0	75.2

Note:
- 460-3-60 indicates 460 V, three phase, 60 Hz.
- For electric heat kit model numbers in this table that include 6HK0, 0 indicates no service disconnect.

Single-point wiring kit

Figure 4: Installing and connecting a single-point wiring kit

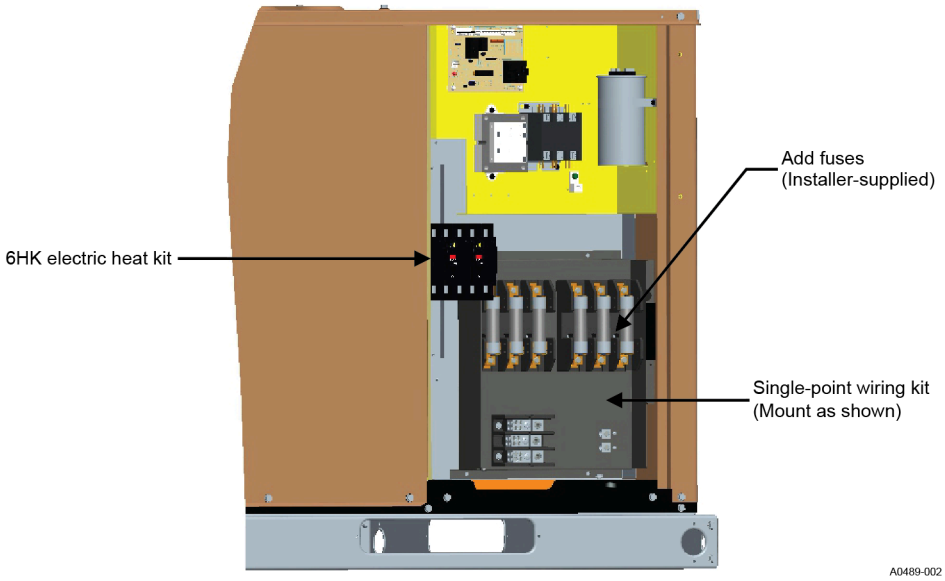

Note:
- For single circuit electric heat kits, remove the wires for the second circuit from the single-point block.
- The wire gauge varies depending on the specific electric heat kit model.

Table 20: Single-point wiring kit

Model	Voltage (V-phase-Hz)	Electric heat kit model	Single-point wiring kit part number	Unit fuse size (A)	Electric heat kit fuse size (A)
PH3E36N00S4	460-3-60	6HK06501046	S1-2SPWK036	15	15
		6HK06501546	S1-2SPWK036	15	25
PH3E48N00S4		6HK06501046	S1-2SPWK036	15	15
		6HK06501546	S1-2SPWK036	15	25
		6HK06502046	S1-2SPWK036	15	30
PH3E60N00S4		6HK06501046	S1-2SPWK036	20	15
		6HK06501546	S1-2SPWK036	20	25
		6HK06502046	S1-2SPWK036	20	30
		6HK06502546	S1-2SPWK037	20	35

Electric heat minimum supply air data

Table 21: Electric heat minimum supply air

Model	Voltage (V-phase-Hz)	Minimum blower speed for electric heat			
		Electric heat kit (kW)			
		10	15	20	25
PH3E36N00S4	460-3-60	Medium high (4)	Medium high (4)	—	—
PH3E48N00S4	460-3-60	Medium low (2)	Medium low (2)	Medium (3)	--
PH3E60N00S4	460-3-60	Medium low (2)	Medium low (2)	Medium low (2)	Medium (3)

Indoor blower specifications

Table 22: Indoor blower specifications

Model	Motor				
	HP	RPM	EFF	SF	Frame
PH3E36N00S4	1/2	Variable	0.8	1.0	48
PH3E48N00S4	1	Variable	0.8	1.0	48
PH3E60N00S4	1	Variable	0.8	1.0	48

Airflow performance data for side duct application

Table 23: Airflow performance data for side duct application

Model	Motor speed	External static pressure (in. W.C.)								
		0.1	0.2	0.3	0.4	0.5	0.6	0.7	0.8	1.0
		SCFM	SCFM	SCFM	SCFM	SCFM	SCFM	SCFM	SCFM	SCFM
PH3E36N00S4	Low (1)	1550	1510	1470	1440	1400	1350	1310	1270	1160
	Low/Medium (2)	1180	1130	1090	1040	990	930	860	780	670
	Medium (3)	1320	1280	1240	1200	1150	1110	1060	990	860
	Medium/High (4)	1440	1400	1360	1320	1280	1240	1190	1150	1010
	High (5)	1550	1510	1470	1440	1400	1350	1310	1270	1160
PH3E48N00S4	Low (1)	2010	1980	1950	1910	1870	1840	1800	1760	1680
	Low/Medium (2)	1520	1480	1450	1400	1360	1320	1280	1240	1150
	Medium (3)	1620	1580	1550	1510	1470	1430	1390	1350	1270
	Medium/High (4)	1820	1790	1760	1720	1680	1640	1600	1570	1490
	High (5)	2010	1980	1950	1910	1870	1840	1800	1760	1680
PH3E60N00S4	Low (1)	2090	2060	2020	1990	1950	1910	1880	1840	1770
	Low/Medium (2)	1700	1670	1630	1590	1550	1520	1480	1440	1370
	Medium (3)	1870	1840	1810	1770	1730	1690	1650	1620	1540
	Medium/High (4)	2020	1990	1960	1920	1880	1850	1810	1770	1700
	High (5)	2090	2060	2020	1990	1950	1910	1880	1840	1770

Note:

- Airflow is tested with dry coil conditions, without air filters, at 230 V.
- Applications above 0.8 in. W.C. external static pressure are not recommended.
- A brushless DC high-efficiency standard ECM blower motor is used for all indoor blower assemblies
- Heating applications are tested at 0.50 in. W.C. external static pressure. Cooling applications are tested according to AHRI Standard 210/240.
- The differences between side duct airflows and bottom duct airflows are insignificant.

Additional static resistance data

Table 24: Additional static resistance

Model	CFM	Wet indoor coil	Economizer	Air filter frame kit
PH3E36N00S4	700	0.01	0.00	0.04
	800	0.02	0.01	0.06
	900	0.03	0.01	0.08
	1000	0.04	0.01	0.10
	1100	0.05	0.01	0.13
	1200	0.06	0.02	0.16
	1300	0.07	0.03	0.17
	1400	0.08	0.04	0.18
PH3E48N00S4	1100	0.02	0.02	0.04
	1200	0.03	0.02	0.04
	1300	0.04	0.02	0.05
	1400	0.05	0.03	0.05
	1500	0.06	0.04	0.06
	1600	0.07	0.04	0.07
	1700	0.07	0.04	0.08
	1800	0.08	0.04	0.09
	1900	0.09	0.05	0.10
	2000	0.09	0.05	0.11
PH3E60N00S4	1100	0.02	0.02	0.04
	1200	0.03	0.02	0.04
	1300	0.04	0.02	0.05
	1400	0.05	0.03	0.05
	1500	0.06	0.04	0.06
	1600	0.07	0.04	0.07
	1700	0.07	0.04	0.08
	1800	0.08	0.04	0.09
	1900	0.09	0.05	0.10
	2000	0.09	0.05	0.11

ⓘ **Note:**

- The pressure drop through the economizer is greater for 100% outdoor air than for 100% return air. If the resistance of the return air duct is less than 0.25 in. W.C., the unit delivers less CFM during full economizer operation.
- The filter pressure drop is based on standard filter media tested at velocities not exceeding 300 ft/min.

Bottom duct dimensions

Figure 5: Bottom duct dimensions (in.)

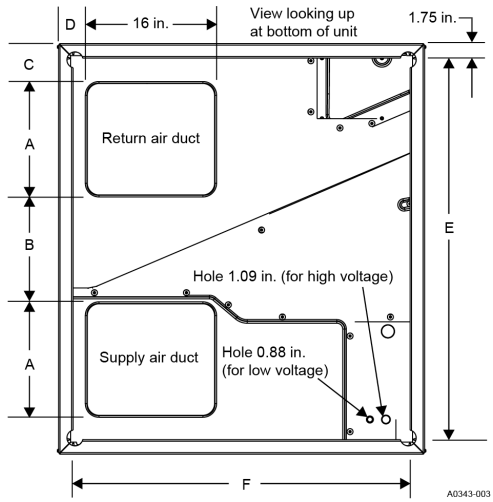

Table 25: Bottom duct dimensions

Model	A (in.)	B (in.)	C (in.)	D (in.)	E (in.)	F (in.)
PH3E36N00S4, PH3E48N00S4, and PH3E60N00S4	14	13.5	5	3.5	47.5	42

Rear duct dimensions

Figure 6: Rear duct dimensions (in.)

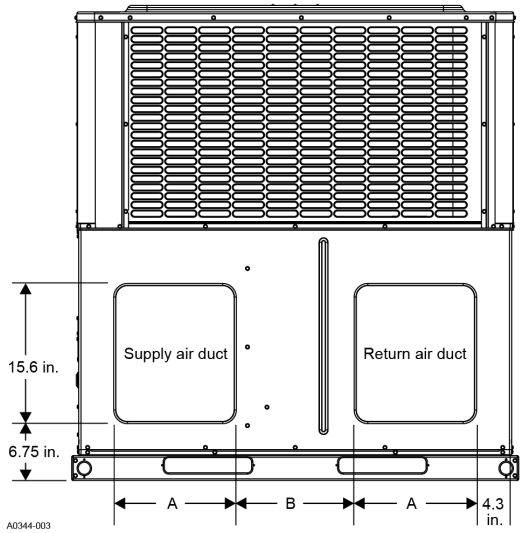

Table 26: Rear duct dimensions

Model	A (in.)	B (in.)
PH3E36N00S4, PH3E48N00S4, and PH3E60N00S4	13.6	14
ⓘ **Note:** See Figure 2 for side hole sizes of electrical lines.		

Typical applications

Figure 7: Typical duct applications for unit

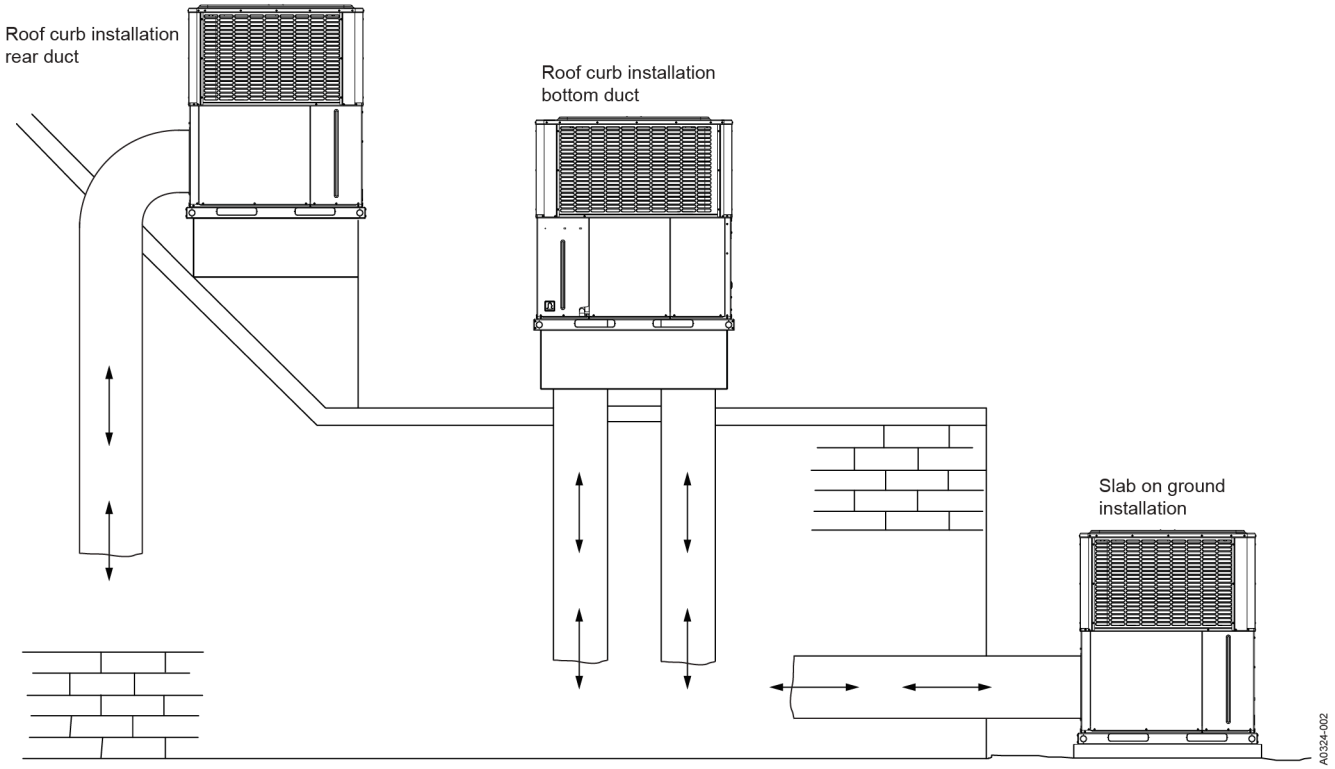

Figure 8: Typical ground installation on slab for unit

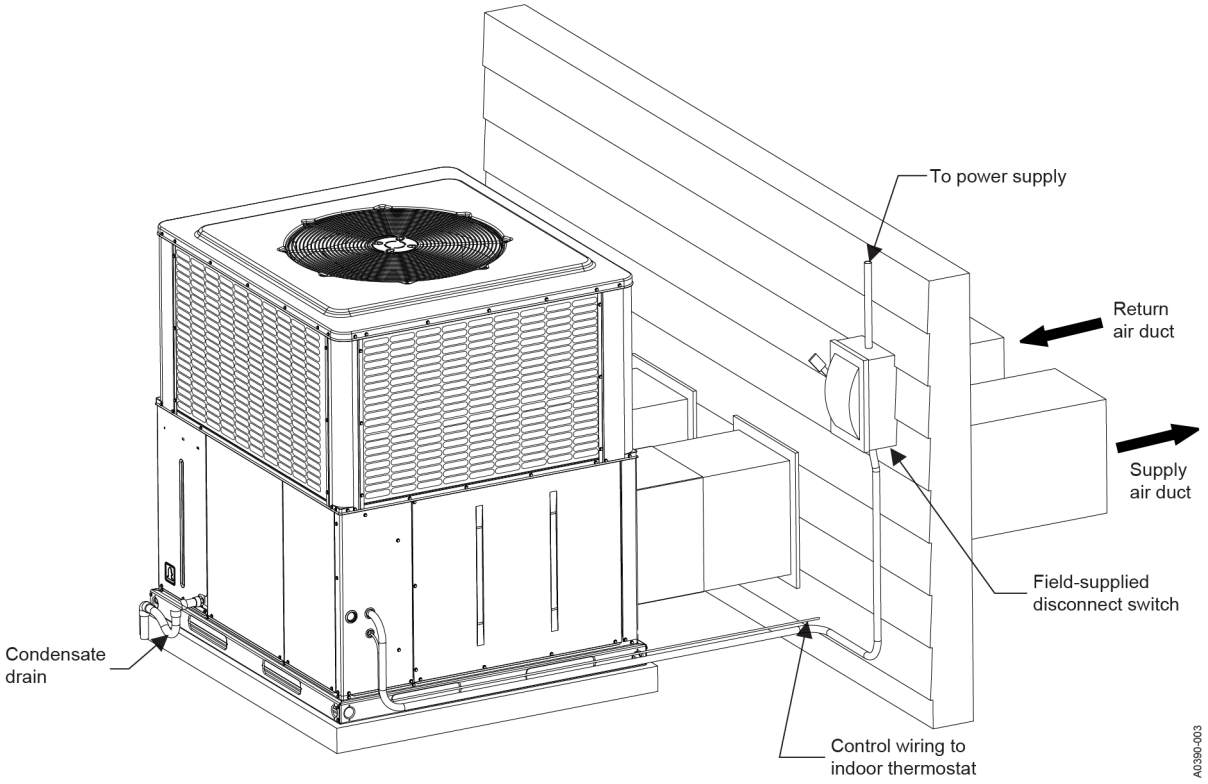

Figure 9: Typical installation on roof curb for unit

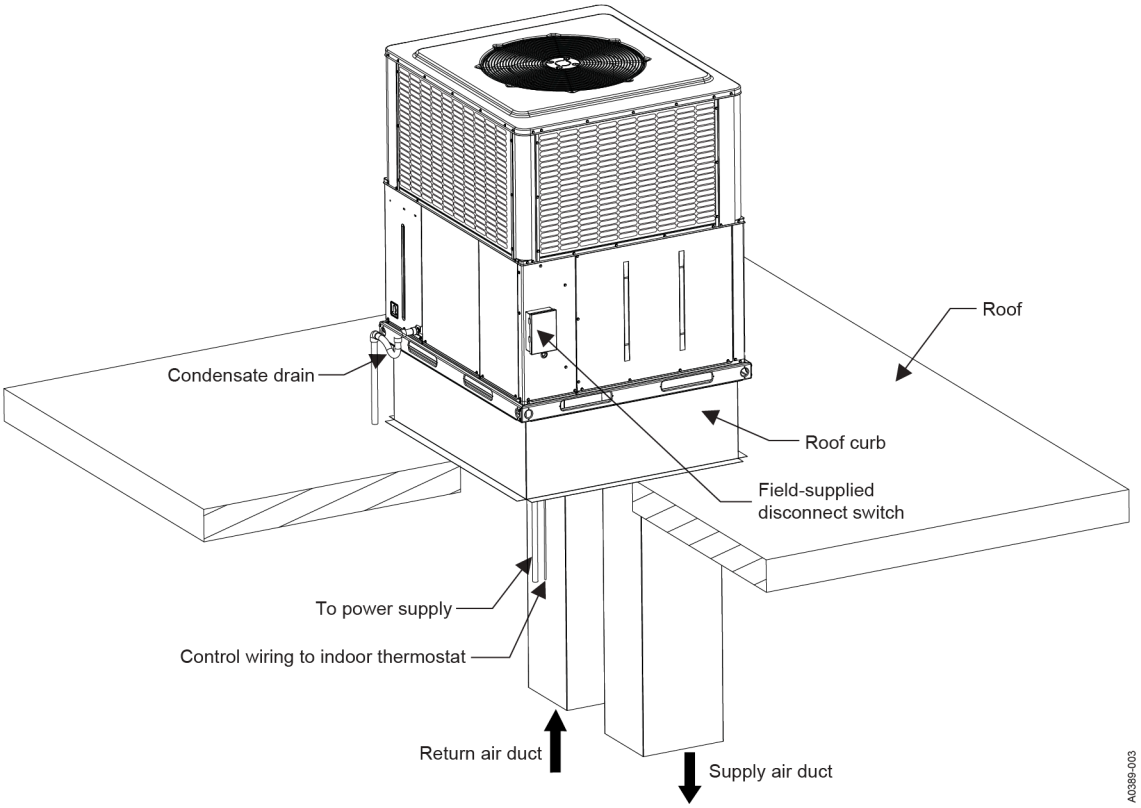

Third-party trademarks

Third-Party Trademarks Notice: For information about third-party trademarks, refer to the relevant company websites.

Subject to change without notice. Printed in U.S.A. Copyright © 2026 by BHC Residential & Light Commercial LLC. All rights reserved.