CMF3 Series
Gas Furnace (80%) AFUE

The CMF3 Series Furnace is a classic and time honored design. The CMF3 is a versatile and reliable product used in Manufactured Housing. The new model CMF3 Furnace incorporates a multi-speed blower and multi-fired burner. Classic design countered with new technology make the new CMF3 today's heating choice for Manufactured Housing.

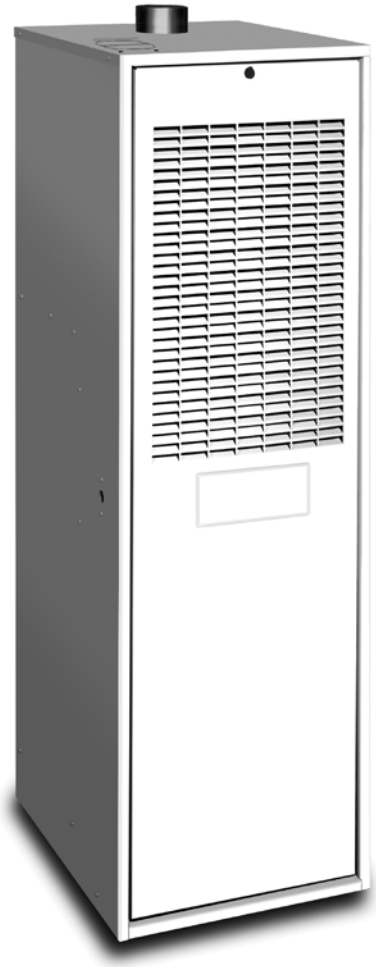

FEATURES and BENEFITS

- Redesigned, five speed, custom fit blower for efficient, quiet and comfortable operation.
- Multi-firing technology.
- Resized fan switch eliminates nuisance cycling.
- Classic 18" width dimension for tight replacement jobs.
- MA 100, MA 200, and CB 200 bases for versatility in applications.
- Drum/Tubular heat exchanger assures long life.
- Disposable filter (16x25x1) in the door.
- New plunger-style door switch.
- New tilt out door with more louvers for better airflow.
- Insulated cabinet.
- Metal pawl latch firmly secures door to furnace cabinet.

DIMENSIONS

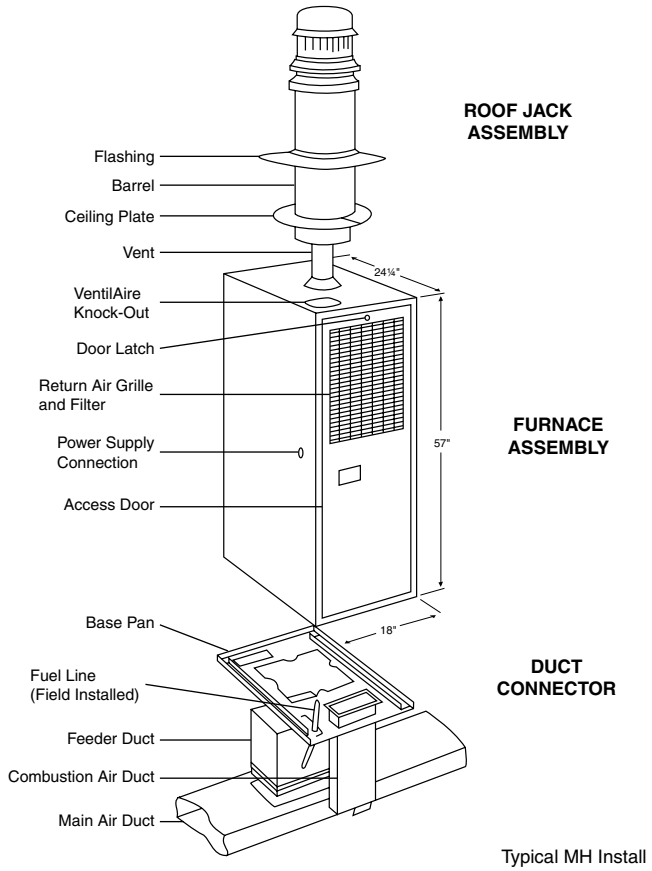

Typical MH Install

AIRFLOW

UNIT CMF3

External Static Pressure (in WC)	Airflow (CFM)		
	Low speed For 60 Kbtu/h Input	Medium Speed For 70 Kbtu/h Input	High Speed
0.1	680	760	900
0.2	660	720	850
0.3	630	680	800
0.4	600	630	750
0.5	560	600	690
0.6	510	530	630

SPECIFICATIONS

	CMF3 70 PG Convertible
Factory Set Firing Rate (btu/hr)*	70,000
Heating Capactiy (btu/hr)	56,000
Kit Converted** Firing Rate (btu/hr)	60,000
AFUE Rating (%)	80+
Orifice Number for Natural Gas	22
Orifice Number for Propane (LP) Gas	41
Blower D x W	10 x 7
Motor H.P. -Speed -Type	1/2 H.P. -5 -ECM
Motor FLA	6.4 FLA
Fuse or Breaker	15 Amps
Temperature Rise Range (Degree F)	55° - 85°

Note: All models are 115 volt, 60 Hz, 1 phase. Gas connections are 1/2" NPT. Thermostat circuit is 24V, 60 Hz, 15VAC.
AFUE = Annual Fuel Utilization Efficiency
* Ratings to 2,000 ft. Over 2,000 ft, reduce ratings by 4% for each additional 1,000 ft above sea level.
** The firing rate of the CMF series furnaces can be changed using an approved conversion kit.

ACCESSORIES

CMF Conversion Kits

PART NO.	DESCRIPTION
1009821	CMF3PG 70 Kbtu/h to 60 Kbtu/h Conv. Kit

CMF Base Packages

PART NO.	DESCRIPTION
901696	CB-200A Cottage Base
903452	MA-200 Base Package with 3” feeder duct
903453	MA-200 Base Package with 8” feeder duct
903454	MA-200 Base Package with 13” feeder duct
903450	MA-100 Universal Base Package with 8” feeder duct
903451	MA-100 Universal Base Package with 13” feeder duct

Roofjacks

PART NO.	DESCRIPTION
104060000	SRJ1 Roof Jack Assembly
104060003	SRJ2 Roof Jack Assembly
104060015	SRJ3 Roof Jack Assembly
104060018	SRJ4 Roof Jack Assembly
104060024	SRJ5 Roof Jack Assembly
104360001	SRJ Roof Jack Extension
104781000	Crown Assembly Replacement

Miscellaneous

PART NO.	DESCRIPTION
902095	Automatic Shut Off Damper*
901855	New England Safety Kit
903456	Combustion Air Inlet Adapter Kit

*Required when home is air conditioned by a self-contained unit.

Adapters

PART NO.	DESCRIPTION
903893	(4) 2.5" x 12" Roof Wedge
903894	(4) 3.0" x 12" Roof Wedge
903895	(4) 4.0" x 12" Roof Wedge

Vent Pipes

PART NO.	DESCRIPTION
103947002	Vent Pipe-28
103947004	Vent Pipe-34
103947005	Vent Pipe-40
901697	Offset Vent Pipe

VentilAire™

PART NO.	DESCRIPTION
914098B	Ventilaire III
914229B	Ventilaire IV
917201A	Ventilaire Soffit Vent System

ORDERING INFORMATION

Please specify Model No. and Serial No. along with the exact part number(s) when ordering parts from the nearest authorized Dealer or Service Center.

We Encourage Professionalism

Through Technician Certification by NATE

Member

GENERAL TERMS OF LIMITED WARRANTY

Nortek Global HVAC, LLC will furnish a replacement for any part of this product which fails in normal use and service within the terms and conditions of the warranty.

For complete details of the Limited Warranty, including applicable terms and conditions, see your local installer or contact the Nortek Global HVAC, LLC warranty department for a copy.

Before purchasing this appliance, read important energy cost and efficiency information available from your retailer. Specifications and illustrations subject to change without notice and without incurring obligations. Printed in U.S.A (01/2022)

715E-0122 (Replaces 715E-0520)